EXPERIMENT-4: A Look at Various Diode Application Circuits

Group:14

22CS02002

Soham Chakraborty

Part-1: Shunt clippers using circuits

Aim:

Analyse and understand the applications of the shunt clippers.

Apparatus:

- Resistor-1kΩ
- Diode-1N4007
- Connecting wires
- Bread board
- Digital Storage Oscilloscope
- CRO Function generator

Theory of clippers:

A clipper is a device used to 'clip' the input voltage to prevent it from attaining a value larger than a predefined one. The combination of resistor and diode is used for the clipper circuit. There are two types of clippers by polarity, known by positive clipper and negative clipper. As the names suggest they clip the respective areas.

Figure 1 Positive clipper working model. *Figure 2 Negative clipper working model.*

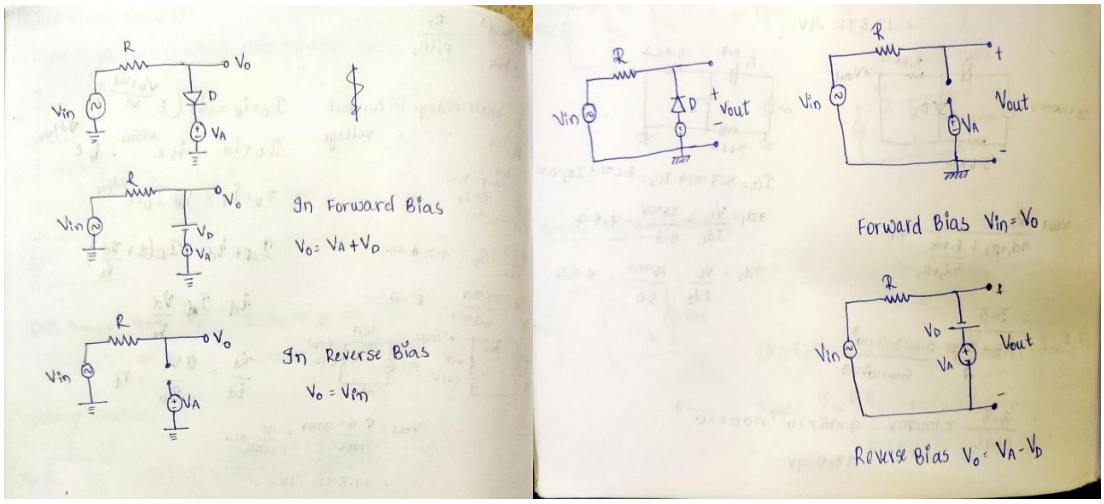

Procedure:

Wire up the circuit as shown in the figure.

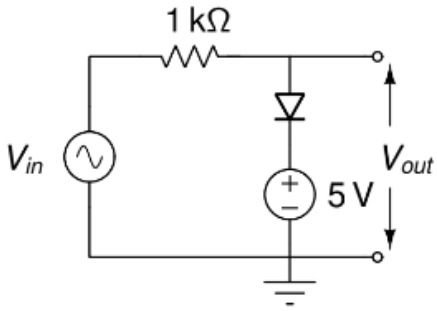

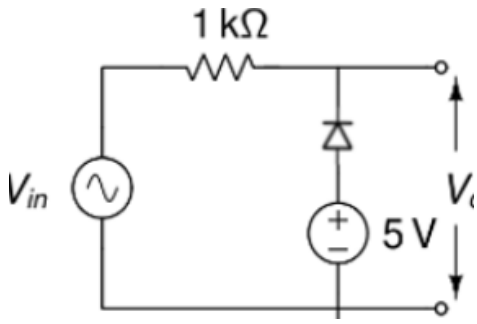

Observations:

<u>The Voltage Transfer characteristics of the clippers:</u>

- It is a negative clipper. Clips the values for negative input.The circuit diagram is of figure two.The negative cycles are indicated by the straight horizontal line and the positive is indicated with a line of slope R.

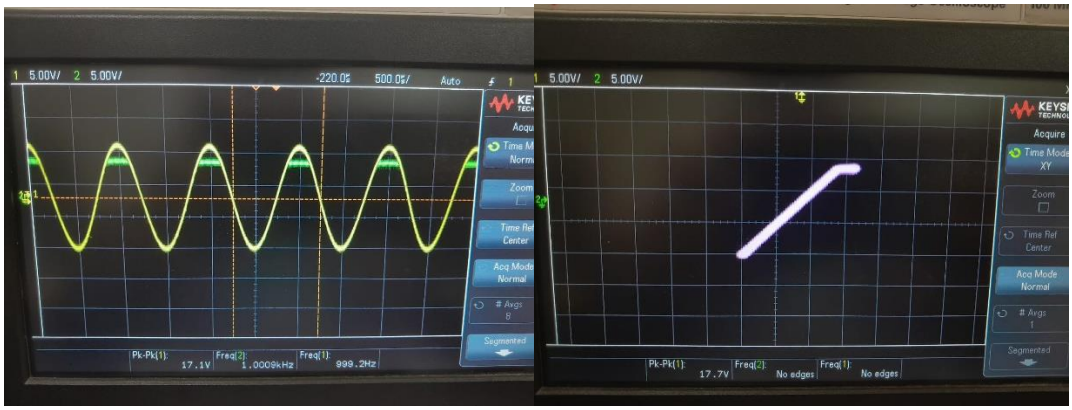

- It is a positive clipper. Clips the values for positive input.The circuit diagram is of figure two.The positive half cycles are indicated by the straight horizontal line and the negatives are indicated with a line of slope R.

Conclusion:

I have understood the behaviour of clippers which can used in many real-life applications in varying and limiting the voltage through the loads.

Part-2: Full wave and Bridge Rectifiers

Aim:

To understand the conversion of AC voltage into DC voltage using rectifier.

Apparatus:

- Step down transformer
- Resistor-10kΩ
- Diode-1N4007-6 units

Theory:

A full wave rectifier converts both halves of each cycle of an alternating wave (AC signal) into a pulsating DC signal.

Vout=Vin-2Vd.

Vdc/ Average of the output voltage will be 0.636(Vin-2Vd)

*2Vd because two diodes are used and we have to minus them from input voltage Vin is input voltage amplitude and Vd is voltage drop across diode.

Bridge Rectifier:

Bridge rectifier which consists of four diodes. For a positive cycle two diode operate and for the negative cycle the other two diode operate. These diodes help in converting the AC to pulsating DC. Full wave rectification is efficient because we are using both the cycle of input and get a positive cycle output for both positive and negative cycle.

Centre Tap Rectifier:

The centre tapped full wave rectifier is made up of an AC source, a centre tapped transformer, two diodes, and a load resistor. The AC source is connected to the primary winding of the centre tapped transformer. A centre tap (additional wire) connected at the exact middle of the secondary winding divides the input voltage into two parts.

The upper part of the secondary winding is connected to the diode D_1 and the lower part of the secondary winding is connected to the diode D_2. Both diode D_1 and diode D_2 are connected to a common load R_L with the help of a centre tap transformer. The centre tap is generally considered as the ground point or the zero-voltage reference point.

Procedure:

Build the rectifier circuits as shown in the figures **(a)** and **(b)**. Use the secondary winding with ±12V rating.

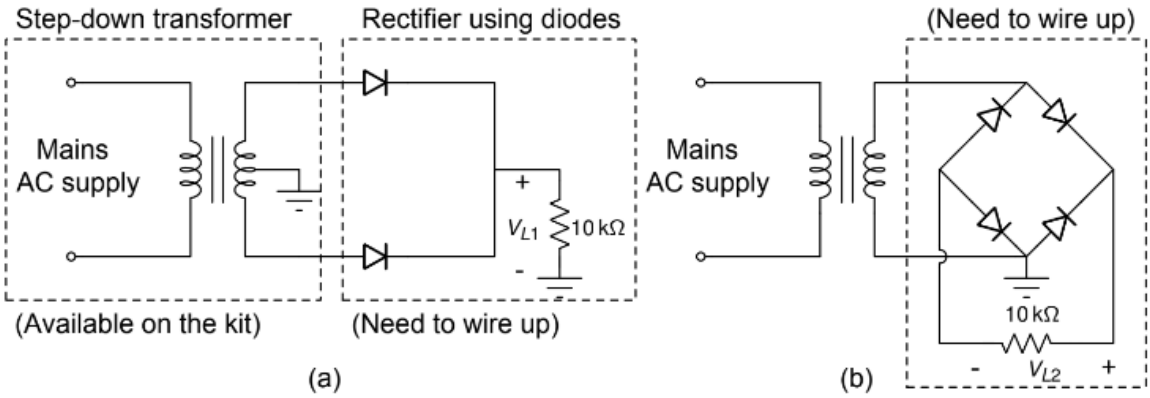

Precautions and instructions:

1. Connections of the diode should be correct.
2. Instead of oscilloscope a. c/d. c voltmeter may be used.
3. Step down transformer is to be used.

Observations:

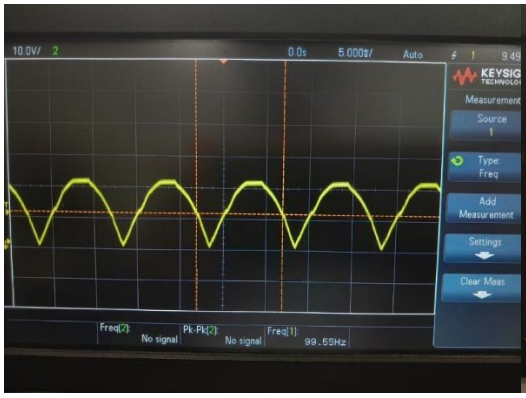

Figure 3 centre tap rectifier

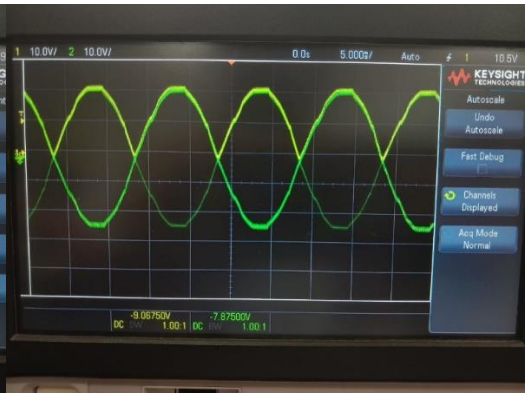

Figure 4 Bridge rectifier

V_{PP} = 21V-50Hz VL_1 = 18.06V V_{L2} = 18.125V

DC $_{average}$ V_{L1} = 13.67V V_{L2} = 14.09V

V_{L1} was observed to be slightly less than V_{L2}.

The output of a bridge rectifier is a series of positive half-waves with some ripple due to the pulsating nature of the current.
The voltage never drops to zero as the diodes switch very quickly between conducting states during each half-cycle. The output of a centre-tap rectifier is composed of overlapping half-waves, resulting in a waveform that is not a smooth sine wave. The voltage drops to zero at the centre tap during each cycle, leading to a less continuous output compared to a bridge rectifier.

Efficiency: A bridge rectifier utilizes all four diodes during both positive and negative half-cycles, leading to a more complete utilization of the input AC voltage. A centre-tap rectifier is generally less efficient compared to a bridge rectifier, as it utilizes only half of the secondary winding during each cycle. This means that the transformer and diodes are not used as efficiently as in a bridge rectifier.

Part-3: Voltage Doubler Circuit

Aim:

Understand the operation and performance of a voltage doubler circuit. The objective was to construct and analyse a voltage doubler circuit to understand its behaviour and characteristics.

Theory:

A voltage doubler circuit is based on the principle of charging capacitors through diodes during different phases of the AC input signal. During the positive half-cycle, one capacitor charges through a diode while the other capacitor discharges. During the negative half-cycle, the charging and discharging roles of the capacitors are reversed. As a result, the voltage across the load capacitor doubles in amplitude.

Theoretical voltage doubling ratio: Vout = 2 * Vin

Apparatus:

- 2units- 1N4007 Diode
- 2units-Electrolytic Capacitor(10µF)
- Power Supply (AC source)
- Oscilloscope
- 2units-Resistors- 27k,47k

Procedure:

The circuit was assembled following the circuit diagram provided. The AC input from the power supply was connected to the circuit. The oscilloscope was used to measure input and output voltages, while the multimeter was used to measure voltage ripple and other relevant parameters.

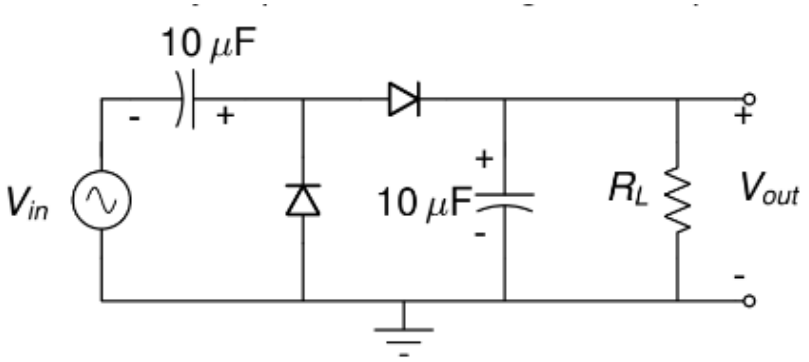

Observations:

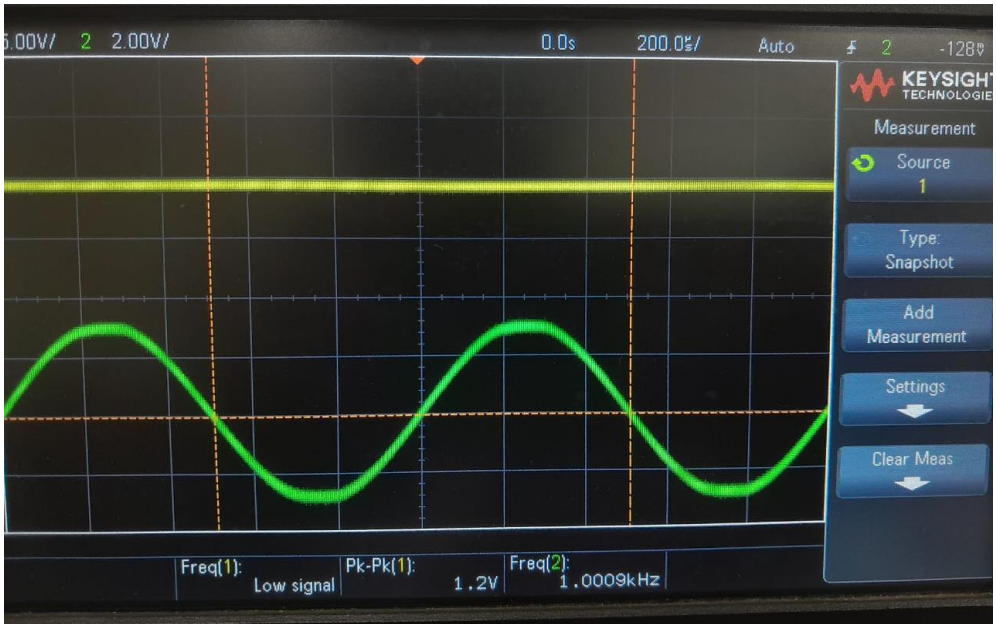

- Vdc for 27k ohm=4.48V Vdc for 47kOhm= 4.57V
- The Ripple factor was observed to be higher for the 27k resistor than the 47k resistor.

Conclusion:

The voltage doubler is one of the most important circuits to be used as there are many high voltage applications in the industry. I have also understood the role of capacitors in storing and discharging which enables many components get the voltage surge required.

Discussions and Queries:

- **The perfect sine wave in the centre tap rectifier:**

The output of a full-wave rectifier doesn't look like a perfect sinusoidal waveform. This is due to the way the diodes conduct. During each half-cycle of the input AC signal, the diodes don't start conducting exactly at zero voltage. There's a small voltage threshold known as the **Diode's forward voltage drop** that must be overcome before the diode starts conducting. This results in a small portion of the input waveform near zero voltage not being immediately rectified. That's due to the V_{Don}=0.7 basically diode drop across the diode. If the diode had been an ideal one, the curve would be a perfect sinusoid.

- **Variance of ripple voltage with Resistance:**

In a voltage doubler circuit, when the load resistance is decreased, the ripple voltage tends to increase. This is because the capacitors discharge more quickly through the lower load resistance, resulting in less time for them to recharge, leading to a larger ripple component.

The discharge time constant (τ) of a capacitor through a resistor is given by the formula:

$$\tau = R\ X\ C$$

Where:

τ = Discharge time constant

R= Load resistance

C= Capacitance of the capacitors in the voltage doubler circuit

The ripple voltage (V_{ripple}) can then be approximated using the formula:

$$V_{ripple} = V_{peak}/(fXRXC)$$

Where:

V_{peak} = voltage of the input AC signal

f = Frequency of the input AC signal

R = Load resistance

C = Capacitance of the capacitors in the voltage doubler circuit

- **Why is the observed output Voltage in the Voltage doubler less than the given input voltage:-**

This is because the diodes used are not ideal. Hence the output voltage observed is $2V-2V_D$, where V_D is the voltage drop across the diode. A perfect voltage doubler can only happen if the diodes are ideal i.e. the $V_D = 0$, which is not the case here. This is also the reason due to which the waveform output is not a perfect sinusoid curve.